SMQ7865
4.5~36V input, 2~5.5V/5~15V, 10W/30W output, Buck DC-DC Converter

Applications

- Industry Control
- Audio Video Devices
- Data Acquisition Equipment
- Automotive Device

Features

- Wide Operating Voltage: 4.5V ~ 36V
- Output Voltage:
  - A: 2~5.5V
  - B: 5~15V
- Output Current Up to 2.5A
- Output power up to
  - A: 10W
  - B: 30W
- Low output voltage ripple
- Minimal space on PCB:
  - 12.7mm x 6.9mm x 20mm
  - 20 mm x 12.7 mm x 8 mm (-R)
- No derating to +TBD℃, natural convection
- UL/IEC/EN60950 compliant
- RoHS Compliant

Description

The SMQ7865 Series Power Modules are non-isolated dc-dc converters that operate over a wide input voltage range of 4.5Vdc to 36Vdc and provide a precisely (2%) regulated dc output. Such a module is suitable to application with 3.3V, 5V, 12V, 24V, and 32V etc bias supply. The modules have a maximum output current rating of 2.5A at typical full-load efficiency over TBD%.

SMQ7865 series can load 2.5A/10W in a very small size. This improves PCB layout and system integration capability.

********** ***Typical Application Circuit*** **********

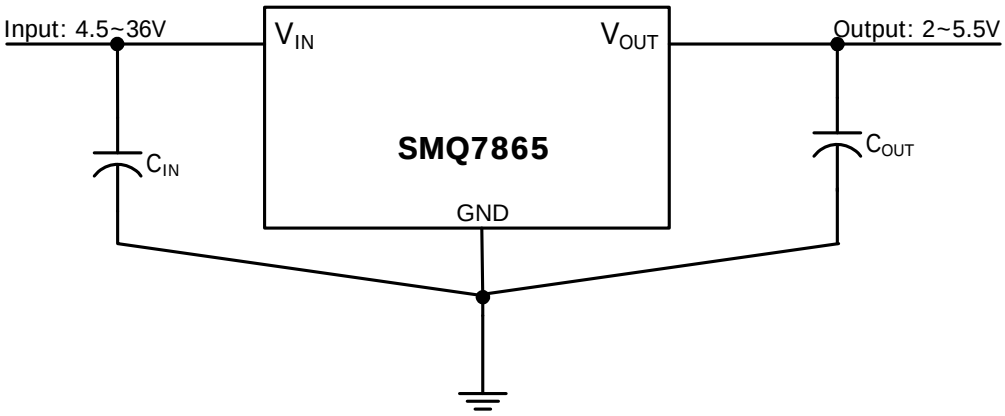

Performance Specifications (at TA=+25℃)

Model	Input V_{IN} Range (V)	Output			Efficiency (%)
		I_{OUT} (A)	Regulation		
			Line (%)	Load (%)	
SMQ7865	4.5~36	2.5	1	1	TBD

Mechanical Specifications

SMQ7867 Dimensions are in millimeters
Tolerances: x.x mm±0.5mm;
x.xx mm±0.25mm

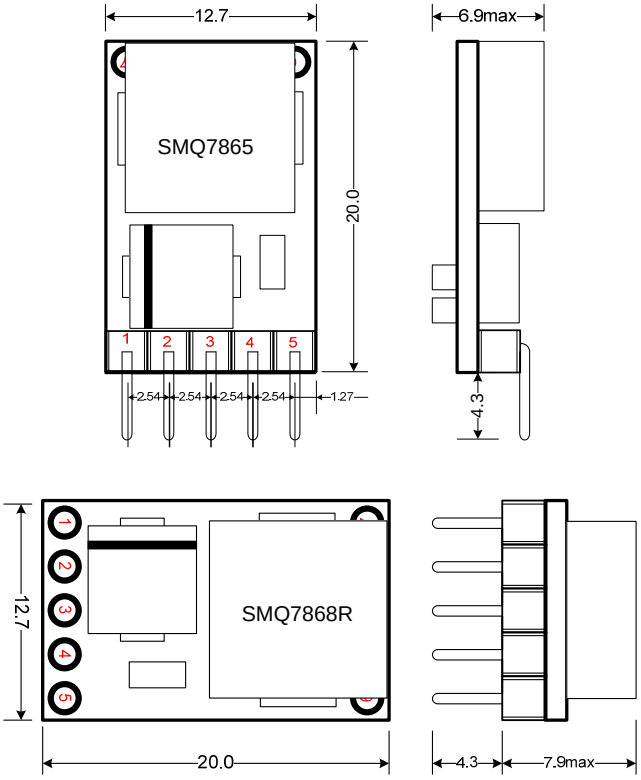

"-R" option

PIN	DESCRIPTION
1	EN, Enable, Logical "High" to turn-off, logic "Low" to turn-on
2	Vin, input
3	GND, Ground
4	Vout, Output
5	Trim, connect one external resistor to adjust output voltage
6,7	N.C, no connect as standoff

Ordering Information

SMQ7865TA-R

Power module P/N

T: Through Hole
S: SMD

-R: RightAngle option

Output Range:
A: 2~5.5V
B: 5~15V

Absolute Maximum Ratings

Note: These are stress ratings. Exposure of devices to any of these conditions may adversely affect long-term reliability. Proper operation under conditions other than those listed in the Performance Specifications Table is not implied.

Parameter	Symbol	Min	Max	Unit
Input Voltage	V_{IN}	4.5	40	V
Storage Temperature	T_{STG}	-40	125	℃

SMQ7867-0240 Electrical Specifications: *(T_A=+25°C)*

Parameter	Condition	Symbol	Min	Typ	Max	Unit
Input Voltage Range		V_{IN}	4.5		36	V
Output Current	Vo.set =5V	Io			2.5	A
Output Voltage Set point	100% load	Δ Vo	-2		+2	%
Temperature Regulation	T_A= $T_{A.MIN}$ To $T_{A.MAX}$	-		0.2		%$V_{O.SET}$
Output Trim Range						V
Line Regulation				1%		
Load Regulation				1%		
Output Ripple and Noise Voltage	See Typical Characteristic					
Transient Response						

Test Configurations

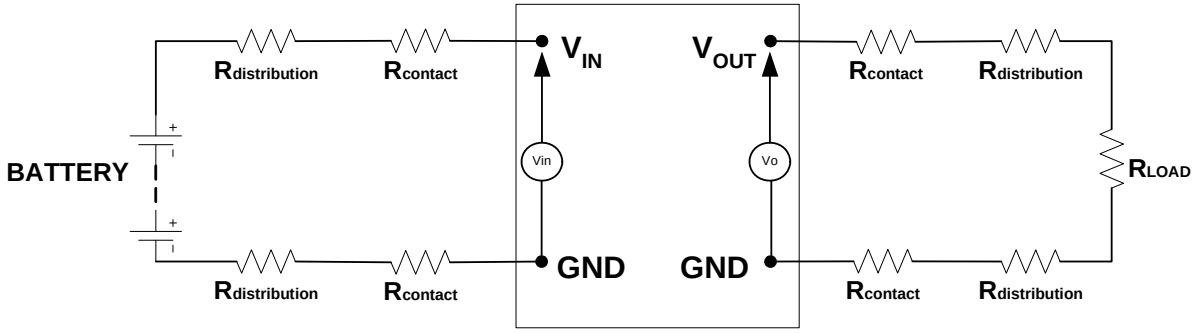

Test setup for efficiency

Note:

All voltage measurements must be taken at the module's terminals, as shown above. If sockets are needed, Kelvin connections are required at the module terminals to avoid measurement errors due to socket contact resistance.

Recommended Hole Pattern

Dimensions are in millimeters
Tolerances: x.x mm±0.5mm;
x.xx mm±0.25mm

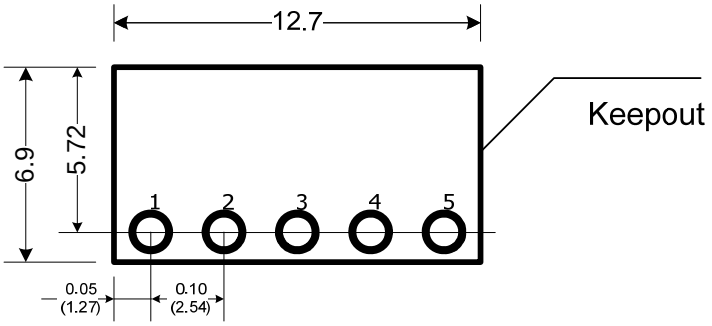

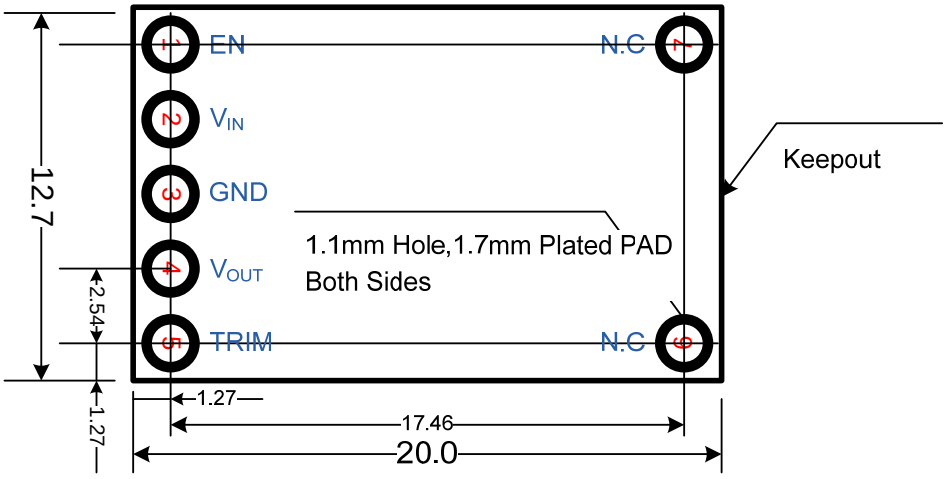

Component-side footprint for Through-Hole Pin Out for "-R" option