SCHMID-M

SL- Series

1W Unregulated Single & Dual output

Features

- 7 Pin SIL Package
- 6000 VDC High Isolation
- Physical Clearance of Isolation Barrier 2.5mm
- Low Ripple and Noise
- Efficiency up to 81%
- Long Term Short Circuit Protection
- -40 ~ 85°C Operation Temperature Range
- 100% safety production test
- Rated working voltage for 250Vrms
- Low coupling capacity

The SL series is a family of cost effective 1W single & dual output DC-DC converters. These converters achieve low cost and miniature SIP size without compromising performance . The bigger case ensures the physical clearance of isolation barrier of 2.5mm, which increases the reliability under hipot from 6KVDC. Devices are encapsulated with flame retardant resin. Input voltages are 5V,9V,12V,15V,24Vdc. with output voltage of 3.3V,5V,9V,12V,15V, ±3.3V, ±5V, ±9V, ±12V, ±15Vdc. Special featuring long term output short circuit protection . Standard features include an input range of ±10% tolerance and low output noise and ripple.

All specifications typical at Ta=25°C, nominal input voltage and full load unless otherwise specified

OUTPUT SPECIFICATIONS	
Voltage Accuracy	±3%
Line Regulation	±1.2% / Per 1% Vin Change
Load Regulation	(From 10% to 100% Load) ±10%
Ripple & Noise(1) (20 Mhz bandwidth)	200mV pk-pk
Short Circuit Protection	Indefinite (Automatic Recovery)
Temperature Coefficient	±0.03%/℃
Capacitor Load(2)	See Table

INPUT SPECIFICATIONS	
Voltage Range	±10% ,max.
Input Current	See Table
No-Load Input Current	See Table
Input Filter	Capacitor
Input Reflected Ripple(3) rms thru 12uH inductor,5Hz to20MHz	20 mA rms

GENERAL SPECIFICATIONS	
Efficiency	See table
I/O Isolation Voltage(60 sec)	6000Vdc
I/O Isolation Capacitance	10 pF
I/O Isolation Resistance	1000M Ohm
Switching Frequency	Typical 20~50KHz
Humidity	95% rel H
Reliability Calculated MTBF(MIL-HDBK-217 F)	>2.39 Mhrs
Safety Standard :(designed to meet)	IEC 60950-1

ENVIRONMENT SPECIFICATIONS	
Operating Temperature	40℃~85℃
Maximum Case Temperature	100℃
Storage Temperature	-40℃~125℃
Cooling	Nature Convection

PHYSICAL SPECIFICATIONS	
Clearance Distance	(Input to Output) 2.5 mm
Case Material	Epoxy encapsulated(UL94V-0 rated)
Pin Material	0.5mm Alloy 42 Solder-coated
Potting Material	Epoxy (UL94V-0 rated)
Weight	4.2g
Dimensions	0.77"x0.39"x0.49"

ABSOLUTE MAXIMUM RATINGS(4)	
These are stress ratings. Exposure of devices to any of these conditions may adversely affect long-term reliability.	
Input Surge Voltage(100mS)	
5 Models	7 Vdc ,max.
9 Models	12 Vdc ,max.
12 Models	15 Vdc ,max.
15 Models	18 Vdc ,max.
24 Models	28 Vdc ,max.
Soldering Temperature (1.5mm from case 10sec. max.)	260°C ,max.

EMC SPECIFICATIONS		
Conducted Emissions(6)	EN55022	CLASS B
Radiated Emissions	EN55022	CLASS B
ESD	IEC 61000-4-2	Perf. Criteria A
RS	IEC 61000-4-3	Perf. Criteria A
EFT(7)	IEC 61000-4-4	Perf. Criteria A
CS	IEC 61000-4-6	Perf. Criteria A
PFMF	IEC 61000-4-8	Perf. Criteria A

The Copyright and authority for the interpretation of the products are reserved by SCHMID-M. Specifications subject to change without notice.

PART NUMBER STRUCTURE

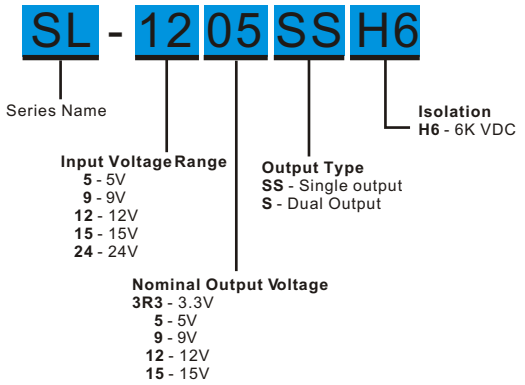

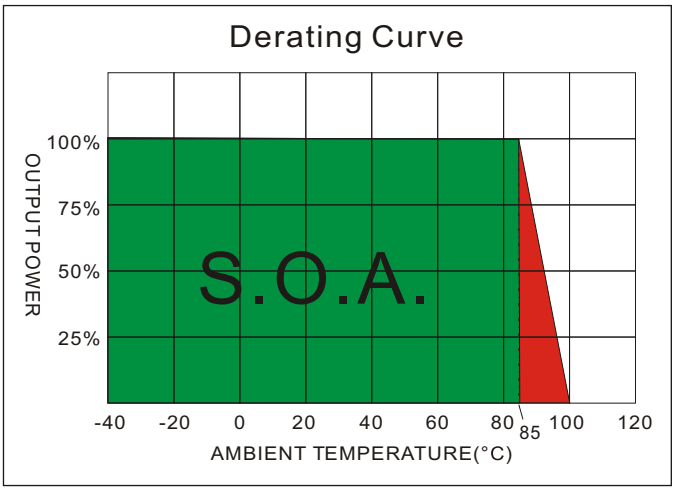

MODEL SELECTION GUIDE

MODEL NUMBER	INPUT Voltage Range (Vdc)	OUTPUT		EFFICIENCY @FL(%)	Capacitor Load(uF)
		Voltage(Vdc)	Current(mA)		
SL-XX3R3SSH6	5, 9, 12, 15, 24	3.3	303	69 - 75	220
SL-XX05SSH6	5, 9, 12, 15, 24	5	200	70 - 77	220
SL-XX09SSH6	5, 9, 12, 15, 24	9	111.1	70 - 80	220
SL-XX12SSH6	5, 9, 12, 15, 24	12	83.3	70 - 80	220
SL-XX15SSH6	5, 9, 12, 15, 24	15	66.7	70 - 80	220
SL-XX3R3SH6	5, 9, 12, 15, 24	±3.3	±151.5	68 - 75	±100
SL-XX05SH6	5, 9, 12, 15, 24	±5	±100	70 - 78	±100
SL-XX09SH6	5, 9, 12, 15, 24	±9	±55.6	70 - 81	±100
SL-XX12SH6	5, 9, 12, 15, 24	±12	±41.7	72 - 81	±100
SL-XX15SH6	5, 9, 12, 15, 24	±15	±33.3	70 - 81	±100

XX=Input Voltage

TEST CONFIGURATIONS

EMI Filter

Input filter components (C1, L , C2 , C3) are used to help meet conducted emissions requirement for the module. These components should be mounted as close as possible to the module; and all leads should be minimized to decrease radiated noise.

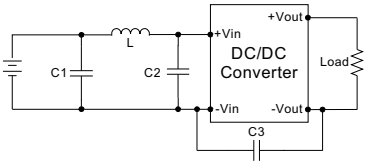

	C1	L	C2	C3
S3-3R3XXXXX	1210, 2.2uF/100V	18uH		
S3-05XXXXX	1210, 2.2uF/100V	18uH		
S3-12XXXXX	1210, 2.2uF/100V	18uH		
S3-15XXXXX	1210, 2.2uF/100V	18uH		
S3-24XXXXX	1210, 2.2uF/100V	18uH	1210, 2.2uF/100V	1206, 470pF/2KV
S3-48XXXXX	Electrolytic capacitor, 10uF/100V	18uH	1210, 2.2uF/100V	1206, 470pF/2KV

NOTE

1. Ripple/Noise measured with 20MHz bandwidth.
2. Tested by minimal Vin and constant resistive load.
3. Measured Input reflected ripple current with a simulated source inductance of 12uH.
4. Exceeding the absolute ratings of the unit could cause damage. It is not allowed for continuous operating.
5. Operation under no-load conditions will not damage these devices, however they may not meet all listed specifications.
6. Input filter components are be required to help meet conducted emission class B, which application refer to the EMI Filter of design & feature configuration.
7. An external filter capacitor is required if the module has to meet IEC61000-4-4. The filter capacitor Schmid-M suggest: Nippon - chemi - con KY series, 470uF/100V.
8. For reduce converter's ripple & noise, it is recommended to add a 4.7μF~100μF(±4.7μF~±68μF for dual output) capacitor in output end. For EMI performance improvement, it is recommended to add a 12μH inductor and a 10μF~100μF capacitor in input end.

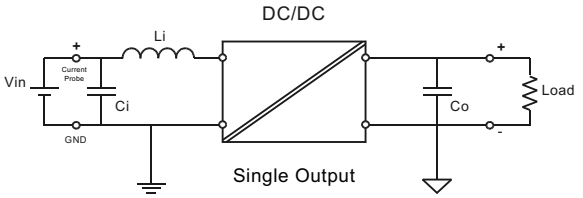

MECHANICAL SPECIFICATIONS

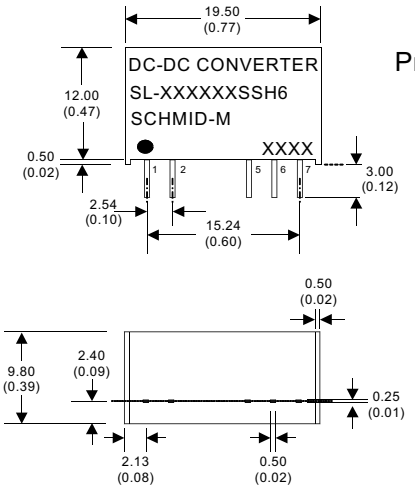

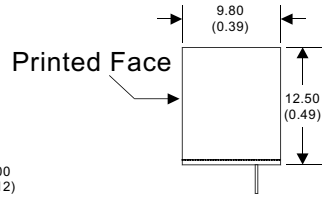

7 Pin SIL Package

Notes : All dimensions are typical in millimeters (inches).
1. Pin diameter: 0.5±0.05 (0.02±0.002)
2. Pin pitch and length tolerance: ±0.35 (±0.014)
3. Case Tolerance: ±0.5 (±0.02)

PIN CONNECTIONS		
PIN NUMBER	SINGLE	DUAL
1	+V Input	+V Input
2	−V Input	−V Input
5	−V Output	−V Output
6	N.P.	Common
7	+V Output	+V Output

The Copyright and authority for the interpretation of the products are reserved by SCHMID-M. Specifications subject to change without notice.