SRW-20W Series

SCHMID-M

20W Ultra Wide Input Range *Regulated Single & Dual output*

Features

- Ultra Wide Input Range
- 3000 VDC Isolation
- Efficiency up to 90%
- -40°C~ 100°C Operation Temperature Range
- Adjustable Output Voltage
- Remote On/Off Control (CTRL)
- Continuous Short Circuit Protection
- Over Load Protection
- Over Voltage Protection
- Under voltage lock-out circuit
- Built-in EMI filter meets EN50121-3-2 class A without external components
- EN 50155 approval for railway applications

The SRW-20W series are high performance 20W single & dual output DC-DC converters. These converters combine copper package in a 1.09"x1.09" case with high performance features such as high efficiency , continuous short circuit protection with automatic restart and tight line / load regulation. Devices are encapsulated using flame retardant resin. Compliance with railway Input voltages of 24, 36, 48, 72, 96 and 110Vdc with output voltage of 3.3 , 5 , 12 , 15 , ±5, ±12 , ±15 . High performance features include high efficiency operation up to 90% and output voltage accuracy of ±1% maximum.

ALL SPECIFICATIONS ARE TYPICAL AT 25°C, NOMINAL INPUT AND FULL LOAD UNLESS OTHERWISE NOTED.

OUTPUT SPECIFICATIONS

Output Voltage Accuracy	±1%
Output Voltage Adjustability(Trim)	Single output: ±10%, max.
Maximum Output Current	See table
Line Regulation	±0.5%, max.
Load Regulation(Io=0% to 100%)	Single: ±0.5%, max. Dual:±1%, max.(balanced load)
Cross Regulation (Dual Output) (1)	±5%
Ripple&Noise **Measured by 20MHz bandwidth** **With a 10uF/25V X7R MLCC** **With a 10uF/25V X7R MLCC for each output**	Single output:75mVpk-pk,max. Dual output:75mVpk-pk,max.
Over Voltage Protection	140% of Vout, typ.
Over Load Protection	170% of FL, typ.
Short Circuit Protection	Indefinite(hiccup) (Automatic Recovery)
Temperature Coefficient	±0.02%/°C
Capacitive Load (2)	See table
Transient Recovery Time (3)	250us, typ.
Transient Response Deviation(3)	±3%, max. Single Output 3.3V:±5%, max.

INPUT SPECIFICATIONS

Input Voltage Range	See table
Under Voltage Lockout	
24V Modes Module ON / OFF	12.3Vdc / 11.6Vdc, typ.
110V Modes Module ON / OFF	40.5Vdc / 38.4Vdc, typ.
Start up Time (Nominal Vin and constant resistive load)	30mS, typ.
Input Filter	Pi Type
Input Current(No-Load)	See table, max.
Input Current(Full-Load)	See table, typ.
Input Reflected Ripple Current(4)	20mAp-p, typ.
Remote On/Off (Positive logic)(5)	
ON:	3.0 ... 12Vdc or open circuit
OFF:	0 ... 1.2Vdc or Short circuit pin2 and pin3
OFF idle current:	3 mA, typ.

ABSOLUTE SPECIFICATIONS (6)

These are stress ratings. Exposure of devices to any of these conditions may adversely affect long-term reliability.

Input Voltage(100mS)	
24 Modes	100 Vdc, max.
110 Modes	185 Vdc, max.
Soldering Temperature(1.5mm from case 10 sec. Max.)	260°C , max.

GENERAL SPECIFICATIONS

Efficiency		See table, typ.
I/O Isolation Voltage(60 sec)		
Input/Output		3000Vdc
Case/Input & Output		1600Vdc
Isolation Resistance		1000 MΩ, min.
Isolation Capacitance		2000 pF, typ.
Switching Frequency	24V Models	330kHz, typ.
	110V Models	245kHz, typ.
Humidity		95% rel H
Reliability Calculated MTBF(MIL-HDBK-217 F)		>190 KHrs
Safety Standard (designed to meet)		IEC/UL/EN 60950-1;EN50155 IEC/UL/EN 62368-1
Safety Approvals :		IEC/UL/EN 60950-1;EN50155 IEC/UL/EN 62368-1

PHYSICAL SPECIFICATIONS

Case Material	Aluminum
Base Material	Non-conductive Black Plastic(UL94V-0 rated)
Pin Material	Φ1.0mm Brass Solder-coated
Potting Material	Epoxy (UL94V-0 rated)
Weight	22.7g
Dimensions	1.09"x1.09"x0.65"

ENVIRONMENTAL SPECIFICATIONS

Operating Ambient Temperature	-40°C ~ +100°C(See Derating Curve) -40°C ~ +61°C(For 100% load)
Maximum Case Temperature	105°C
Thermal Impedance	Heat sink case 11.5°C/W, min.
Storage Temperature	-55°C ~ +125°C
Cooling(7)	Nature Convection
Thermal shock	IEC60068
Shock	EN61373
Vibration	EN61373

EMC SPECIFICATIONS

Radiated Emissions	EN50121-3-2	40dBuV from 30-230MHZ 47dBuV from 230-1000MHZ	
Conducted Emissions(8)	EN50121-3-2	99dBuV from 0.15-0.5MHZ 93dBuV from 0.5-30MHZ	
ESD	EN50121-3-2	Air ± 8KV Contact ± 6KV	Perf. Criteria A
RS	EN50121-3-2	20V/m	Perf. Criteria A
EFT (9)	EN50121-3-2	2.0KV	Perf. Criteria A
Surge (9)	EN50121-3-2	2.0KV	Perf. Criteria A
CS	EN50121-3-2	10V	Perf. Criteria A
PFMF	EN61000-4-8	100A/m	Perf. Criteria A

PART NUMBER STRUCTURE

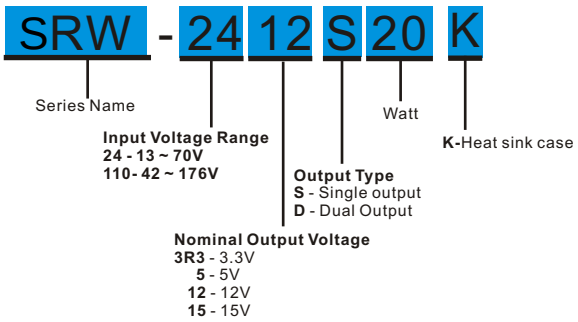

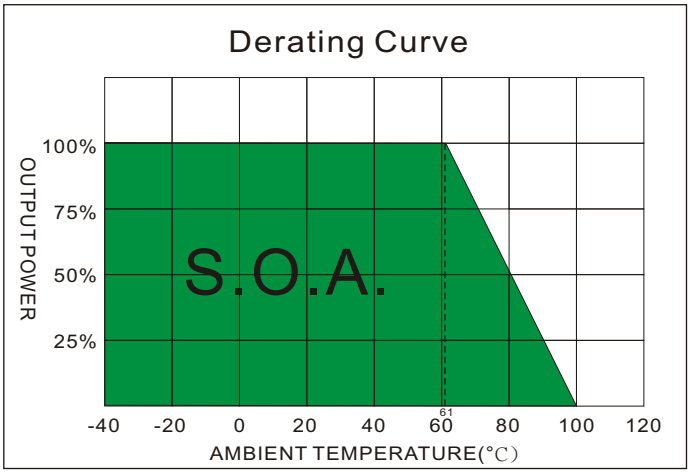

MODEL SELECTION GUIDE

MODEL NUMBER	INPUT Voltage Range (Vdc)	INPUT Current No-Load (mA)	INPUT Current Full Load (mA)	OUTPUT Voltage (Vdc)	OUTPUT Current Min. load (mA)	OUTPUT Current Full load (mA)	EFFICIENCY @FL(%)	Capacitor Load(uF)
SRW-243R3S20K	13.0 ~ 70.0VDC or 24.0VDC	10	711.20	3.3	0	4500	87	7000
SRW-2405S20K	13.0 ~ 70.0VDC or 24.0VDC	10	946.96	5	0	4000	88	5000
SRW-2412S20K	13.0 ~ 70.0VDC or 24.0VDC	10	936.33	12	0	1670	89	850
SRW-2415S20K	13.0 ~ 70.0VDC or 24.0VDC	10	925.92	15	0	1330	90	700
SRW-2405D20K	13.0 ~ 70.0VDC or 24.0VDC	10	968.99	±5	0	±2000	86	±1000
SRW-2412D20K	13.0 ~ 70.0VDC or 24.0VDC	10	925.92	±12	0	±833	90	±680
SRW-2415D20K	13.0 ~ 70.0VDC or 24.0VDC	10	925.92	±15	0	±666	90	±470
SRW-1103R3S20K	42.0 ~ 176.0VDC or 110.0VDC	10	156.97	3.3	0	4500	86	7000
SRW-11005S20K	42.0 ~ 176.0VDC or 110.0VDC	10	206.61	5	0	4000	88	5000
SRW-11012S20K	42.0 ~ 176.0VDC or 110.0VDC	10	211.41	12	0	1670	86	850
SRW-11015S20K	42.0 ~ 176.0VDC or 110.0VDC	10	211.41	15	0	1330	86	700
SRW-11005D20K	42.0 ~ 176.0VDC or 110.0VDC	10	216.45	±5	0	±2000	84	±1000
SRW-11012D20K	42.0 ~ 176.0VDC or 110.0VDC	10	208.98	±12	0	±833	87	±680
SRW-11015D20K	42.0 ~ 176.0VDC or 110.0VDC	10	208.98	±15	0	±666	87	±470

NOTE

1. One load is 25% to 100% load, the other load is 100% load, the output voltage variable rate is within ±5%.
2. Test by nominal input voltage and constant resistor load.
3. Tested by normal Vin and 25% load step change (75%-50%-25% of Io) .
4. Measured Input reflected ripple current with a simulated source inductance of 26μH and a source capacitor Cin(33μF, ESR<1.0Ω at 100KHz).
5. The remote on/off control pin is referenced to -Vin(pin2).
6. Exceeding the absolute ratings of the unit could cause damage. It is not allowed for continuous operating.
7. "Nature Convection" is usually about 30-65 LFM but is not equal to still air (0 LFM).
8. Input filter components are used to help meet conducted emissions 79dBμV from 0.15-0.5MHZ and 73dBμV from 0.5-30MHZ requirement for the module,Which application refer to the EMI Filter of design & feature configuration.
9. An external filter capacitor is required if the module has to meet EFT and Surge in EN50121-3-2.

   The filter capacitor SCHMID-M suggest:

   SRW-24XXX : one electrolytic capacitor (Nippon - chemi - con KY series, 330μF/100V).

   SRW-110XXX : two electrolytic capacitors (Ruby-con BXF series, 100μF/250V) in parallel.

TEST CONFIGURATIONS

Input Reflected Ripple Current Test Step

Input reflected ripple current is measured through a source inductor Lin(26μH) and a source capacitor Cin(33μF, ESR<1.0Ω at 100KHz) at nominal input and full load.

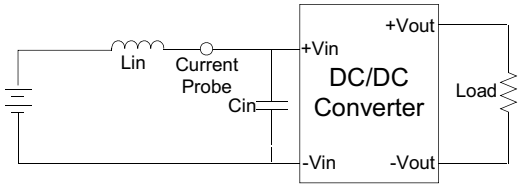

Output Ripple & Noise Measurement Test

To reduce ripple and noise, it is recommended to use a 10μF ceramic disk capacitor to at the output.

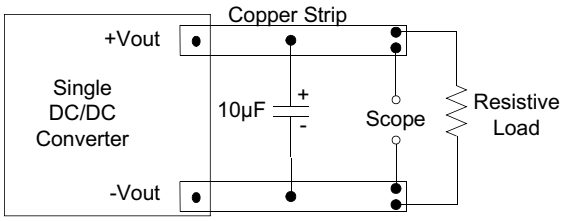

DESIGN & FEATURE CONFIGURATIONS

Over Voltage Protection

The module includes an internal output over voltage protection circuit, which monitors the voltage on the output terminals. If this voltage exceeds the over voltage set point, the module will activate the control loop of internal circuit to clamp the output voltage.

CTRL Module ON / OFF

Positive logic turns on the module during high logic and off during low logic.

Ctrl module on/off can be controlled by an external switch between the ctrl terminal and -Vin terminal. The switch can be an open collector or open drain

For positive logic if the ctrl feature is not used, please leave the ctrl pin floating.

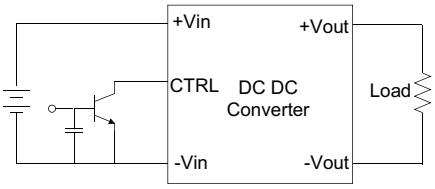

Over Load Protection

The module includes an internal over current protection circuit, which will endure current limiting for an unlimited duration during output over load condition. If the output current exceeds the OCP set point, the module will shut down automatically (hiccup).

The module will try to restart after shut down.
If the over load condition still exists, the module will shut down again.

EMI Filter

Input filter components (C1,C2,C3,C4,C5,C6) are used to help meet conducted emissions 79dBμV from 0.15-0.5MHZ and 73dBμV from 0.5-30MHZ requirement for the module. These components should be mounted as close as possible to the module; and all leads should be minimized to decrease radiated noise.

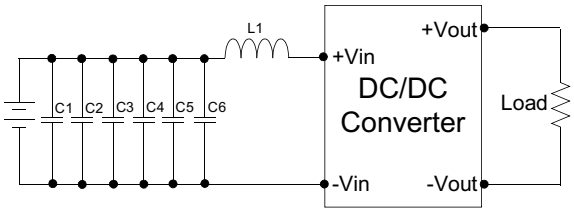

	C1、C2、C3、C4、C5、C6	L1
SRW-24XXX20	None	None
SRW-110XXX20	1812,1μF, 250V	12μH

MECHANICAL SPECIFICATIONS

Heat sink case

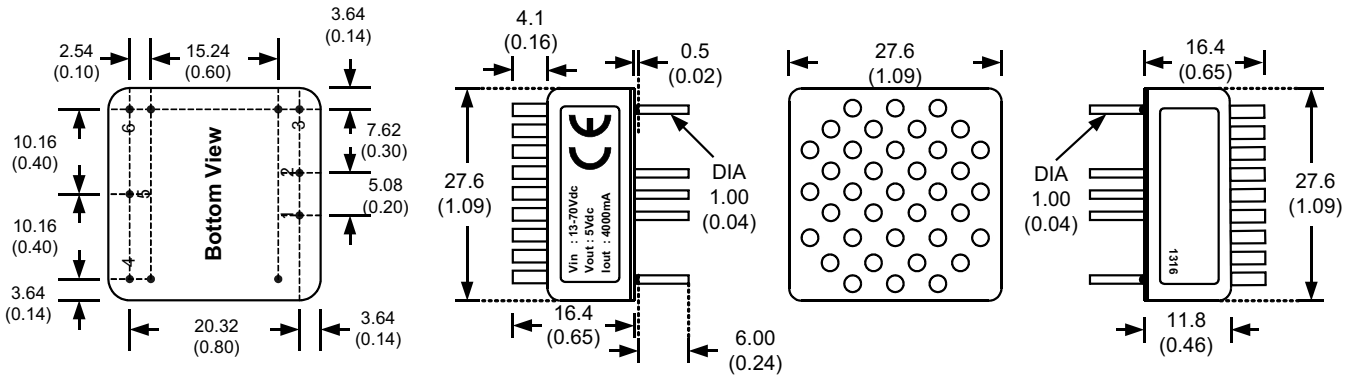

All dimensions are typical in millimeters (inches).
1. Pin diameter: 1.0 ±0.05 (0.04 ±0.002)
2. Pin pitch tolerance: ±0.35 (±0.014)
3. Pin to case tolerance: ±0.5 (±0.02)
4. Case Tolerance: ±0.5 (±0.02)
5. Stand-off tolerance: ±0.1 (±0.004)

PIN CONNECTIONS		
PIN NUMBER	SINGLE	DUAL
1	+Vin	+Vin
2	-Vin	-Vin
3	CTRL	CTRL
4	+Vout	+Vout
5	Trim	Com
6	-Vout	-Vout

EXTERNAL OUTPUT TRIMMING

Output can be externally trimmed by using the method as below. (single output models only)