AC/DC Converter
SLD20-26Bxx Series

20W, AC/DC converter

CE RoHS

FEATURES

- Ultra wide input voltage range: 90 - 528VAC/100 - 745VDC
- Regulated output, Low ripple & noise
- Operating temperature range: -40℃ to +70℃
- Output short circuit, over-current, over–voltage protection
- Isolation voltage: 4KVAC
- EFT /Surge: ±4KV Perf. Criteria B
- Meets IEC62368, EN62368 standards (Pending)

SLD20-26Bxx Series ---- a compact size power converter offered by Schmid-M. It features ultra wide input voltage, taking both DC and AC input voltage, low power consumption, high efficiency, high reliability, safer isolation. Meets EN62368 standards. The isolation voltage is 4000VAC between input and output. The product meets IEC/EN61000-4 , CISPR32/EN55032 Standard. Used in such as electrical, instrumentation industries, Suitable for demanding high isolation voltage and strict electromagnetic compatibility of various terminal applications.

Selection Guide

Certification	Part No.	Output Power	Nominal Output Voltage and Current(Vo/Io)	Efficiency (230VAC, %/Typ.)	Max. Capacitive Load (μF)
CE (Pending)	SLD20-26B03	11.88W	3.3V/3600mA	74	10000
	SLD20-26B05	18W	5V/3600mA	78	10000
	SLD20-26B09	20W	9V/2230mA	79	7000
	SLD20-26B12		12V/1660mA	82	5000
	SLD20-26B15		15V/1330mA	83	3000
	SLD20-26B24		24V/833mA	83	1000

Input Specifications

Item	Operating Conditions	Min.	Typ.	Max.	Unit
Input Voltage Range	AC input	90	--	528	VAC
	DC input	100	--	745	VDC
Input Frequency		47	--	63	Hz
Input Current	115VAC	--	--	0.8	A
	230VAC	--	--	0.4	
Inrush Current	115VAC	--	35	--	
	230VAC	--	60	--	
Leakage current		0.25mA RMS typ. 230VAC/50Hz			
Recommended External Input Fuse		3.15A/500VAC, slow fusing, necessary			
Hot Plug		Unavailable			

Output Specifications

Item	Operating Conditions	Min.	Typ.	Max.	Unit
Output Voltage Accuracy	SLD20-26B03	--	±3	--	%
	Others	--	±2	--	
Line Regulation	Full load	--	±0.5	--	
Load Regulation	0% - 100% load	--	±1.0	--	
Ripple & Noise*	20MHz bandwidth (peak-peak value)	--	--	150	mV
Temperature Coefficient		--	±0.02	--	%/℃
Stand-by Power Consumption		--	--	0.75	W
Short Circuit Protection		Hiccup, continuous, self-recovery			
Over-current Protection		130 - 400%Io self-recovery			
Over - voltage protection	3.3/5V output	⩽ 7.5 V (Output voltage clamp)			
	9V output	⩽ 15 V (Output voltage clamp)			
	12/15V output	⩽ 20 V (Output voltage clamp)			
	24V output	⩽ 30 V (Output voltage clamp)			

The Copyright and authority for the interpretation of the products are reserved by SCHMID-M. Specifications subject to change without notice.

Min. Load		0	--	--	%
Hold-up Time	230VAC input	--	35	--	ms
	400VAC input	--	100	--	

Note: *Parallel line test method is adopted to test the ripple and noise, connect the output capacitor to the external circuit Fig.1, please see AC-DC Converter Application Notes for specific operation methods.

General Specifications

Item		Operating Conditions	Min.	Typ.	Max.	Unit
Isolation Voltage	Input-output	Test time: 1min	4000	--	--	VAC
Operating Temperature		Work in the power drop curve range	-40	--	+70	℃
Storage Temperature			-40	--	+85	
Storage Humidity			--	--	95	%RH
Welding Temperature		Wave-soldering	260 ± 5℃; time: 5 - 10s			
		Manual-welding	360 ±10℃; time: 3 - 5s			
Switching Frequency			--	65	--	kHz
Power Derating		+55℃ to +70℃	3.0	--	--	%/℃
		-40℃ to -10℃	1.0	--	--	
		90VAC - 110VAC	2.0	--	--	%/VAC
		480AVC - 528VAC	0.417	--	--	
Safety Standard			IEC62368/EN62368			
Safety Certification			IEC62368/EN62368 (Pending)			
Safety Class			CLASS I I			
MTBF		MIL-HDBK-217F@25℃	⩾ 300,000 h			

Physical Specifications

Casing Material	Black flame-retardant and heat-resistant plastic (UL94 V-0)
Dimension	70.00*48.00*30.00mm
Weight	160g (Typ.)
Cooling Method	Free air convection

EMC Specifications

EMI	CE	CISPR32/EN55032 CLASS B	
	RE	CISPR32/EN55032 CLASS B	
EMS	ESD	IEC/EN 61000-4-2 Contact ±6KV/Air ±8KV	Perf. Criteria B
	RS	IEC/EN 61000-4-3 10V/m	perf. Criteria A
	EFT	IEC/EN 61000-4-4 ±2KV	perf. Criteria B
		IEC/EN 61000-4-4 ±4KV (See Fig. 2 or Fig. 3 for recommended circuit)	perf. Criteria B
	Surge	IEC/EN 61000-4-5 line to line ±2KV	perf. Criteria B
		IEC/EN 61000-4-5 line to line ±4KV (See Fig. 2 or Fig. 3 for recommended circuit)	perf. Criteria B
	CS	IEC/EN61000-4-6 10Vr.m.s	perf. Criteria A
	Voltage dips, short interruptions and voltage variations immunity	IEC/EN61000-4-11 0%,70%	perf. Criteria B

AC/DC Converter

SLD20-26Bxx Series

Product Characteristic Curve

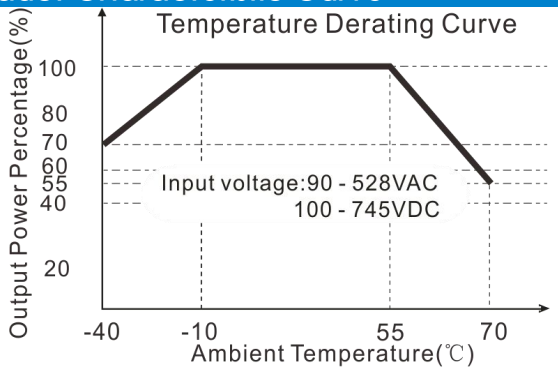

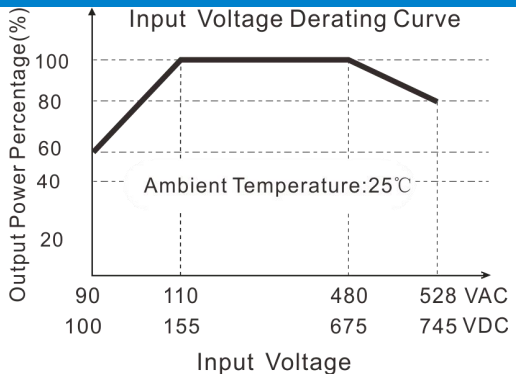

Note:

①Input voltage should be derated based on temperature derating when it is 90 - 110VAC/480 - 528VAC/100 - 155 VDC/675 - 745VDC;

②This product is suitable for use in natural air cooling environments, if in a closed environment, please contact our company's FAE.

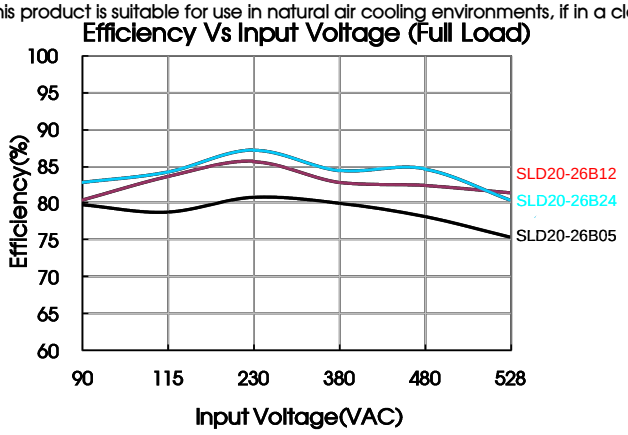

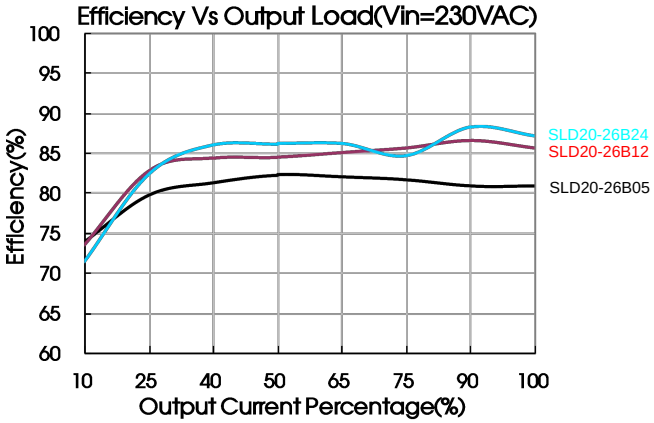

Design Reference

1. Typical application circuit

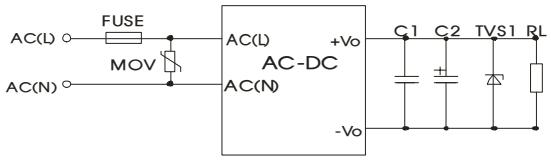

Fig. 1

Element model	C2 (uF)	TVS1
SLD20-26B03	330	SMBJ7.0A
SLD20-26B05	330	SMBJ7.0A
SLD20-26B09	220	SMBJ12A
SLD20-26B12	220	SMBJ20A
SLD20-26B15	220	SMBJ30A
SLD20-26B24	220	SMBJ30A

Note:

1. Output filtering capacitor C2 is electrolytic capacitor, it is recommended to use high frequency and low impedance electrolytic capacitor. For capacitance and current of capacitor please refer to manufacture's datasheet. Capacitor voltage reduced to at least 80%. C1 is ceramic capacitor, which is used to filter high-frequency noise, recommended 1μF. TVS is a recommended component to protect post-circuits if converter fails. External input MOV model is recommended to use S20K625

2. EMC solution-recommended circuit

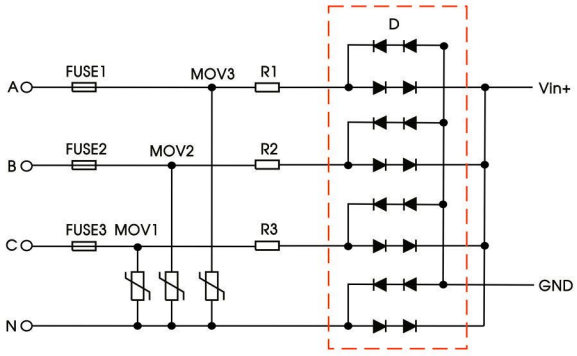

Fig. 2 Recommended circuit for applications which require 4KV differential-mode inrush standard (full-wave rectification)

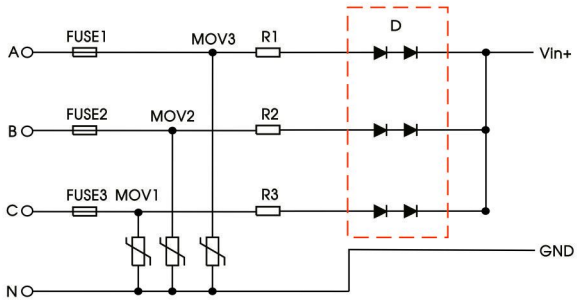

Fig. 3 Recommended circuit for applications which require 4KV differential-mode inrush standard (half-wave rectification)

Recommend Parameter For Higher EMC Standard Circuit	
Element model	Recommended value
MOV1, MOV2, MOV3	S20K510
D	2A/1000V
R1, R2, R3	10Ω/5W
FUSE1, FUSE2, FUSE3	3.15A/500VAC, slow fusing, necessary

Dimensions and Recommended Layout

THIRD ANGLE PROJECTION

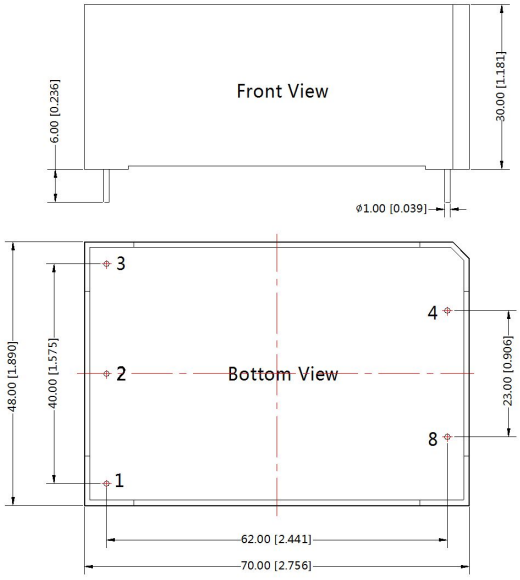

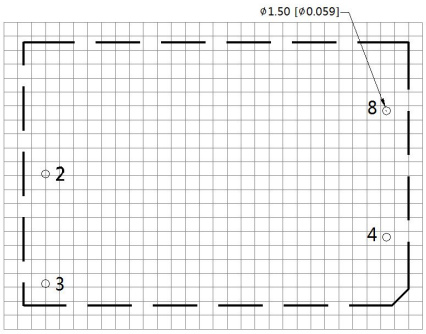

Note: Grid 2.54*2.54mm

Pin-Out	
Pin	Function
1	No pin
2	AC(N)
3	AC(L)
4	+Vo
8	-Vo

Note:
Unit:mm[inch]
Pin diameter tolerances:±0.10[±0.004]
General tolerances:±0.50[±0.020]

Notes:

1. If the product is not operated within the required load range, the product performance cannot be guaranteed to comply with all parameters in the datasheet;
2. Unless otherwise specified, parameters in this datasheet were measured under the conditions of Ta=25℃, humidity<75% with nominal input voltage and rated output load;
3. All index testing methods in this datasheet are based on our Company's corporate standards;
4. We can provide product customization service, please contact our technicians directly for specific information;
5. Products are related to laws and regulations: see "Features" and "EMC".
6. Our products shall be classified according to ISO14001 and related environmental laws and regulations, and shall be handled by qualified units.

The Copyright and authority for the interpretation of the products are reserved by SCHMID-M. Specifications subject to change without notice.