AC/DC 350W Enclosed Switching Power Supply

SLMF350-23BxxUH, SLMF350-23BxxUH-YW Series

UL62368-1 EN62368-1 GB4943.1 BS EN 62368-1 RoHS

FEATURES

- Universal 85 - 305VAC or 120 - 430VDC Input voltage
- Accepts AC or DC input (dual-use of same terminal)
- Semi-potted process, fanless design
- Operating ambient temperature range: -40℃ to +85℃
- Low standby power consumption, high efficiency
- Active PFC
- 150% peak load output for 1 second
- High I/O isolation test voltage up to 4000VAC
- Output short circuit, over-current, over-voltage, over-temperature protection
- Operating altitude up to 5000m
- Safety according to EN61558, EN60335

SLMF350-23BxxUH series is one of SCHMID-M's enclosed fanless semi-potted ultra narrow AC-DC switching power supply, it is suitable for industrial and outdoor occasions where the application environment is relatively harsh. It features 305VAC operating conditions, universal AC input and at the same time accepts DC input voltage, cost-effective, high PF value, high efficiency, high reliability, 150% peak load output and operating altitude up to 5000m. These converters offer excellent EMC performance and meet EN/UL/BS EN62368, EN60335, EN61558, GB4943 standards and they are widely used in areas of industrial, lighting, electricity, security, telecommunications, smart home etc.

Selection Guide

Certification	Part No.*	Rated Output Power (W)*	Nominal Output Voltage and Current (Vo/Io)*	Output Voltage Adjustable Range (V)	Efficiency at 230VAC (%) Typ.	Room Temperature Max. Capacitive Load (μF)	Low Temperature Max. Capacitive Load (μF)
UL/EN/CCC/ BS	SLMF350-23B05UH	300	5V/60A	4.5-5.5	90	12000	6000
	SLMF350-23B12UH	350.4	12V/29.2A	11.4-12.6	92	10000	4000
	SLMF350-23B24UH	350.4	24V/14.6A	22.8-25.2	94	8000	3000
	SLMF350-23B36UH	351	36V/9.75A	34.2-37.8	94	6000	2000
	SLMF350-23B48UH	350.4	48V/7.32A	45.6-50.4	94	4000	1000

Note: 1.*Under any conditions, the total power of the product should not exceed the rated output power, and the output current should not exceed the rated output current;
2.*12V, 24V output product with optional salt-spray proof at terminal: SLMF350-23BxxUH-YW.

Input Specifications

Item	Operating Conditions		Min.	Typ.	Max.	Unit
Input Voltage Range	AC input		85	--	305	VAC
	DC input		120	--	430	VDC
Input Voltage Frequency			47	--	63	Hz
Input Current	115VAC		--	--	4	A
	230VAC		--	--	2	
Inrush Current	115VAC	Cold start	--	30	--	
	230VAC		--	60	--	
Power Factor	115VAC	Full load	0.98	--	--	--
	230VAC		0.98	--	--	
Leakage Current	240VAC		<0.5mA			
Hot Plug			Unavailable			

AC/DC 350W Enclosed Switching Power Supply

Output Specifications

Item	Operating Conditions		Min.	Typ.	Max.	Unit
Output Voltage Accuracy	Full load range	5V	--	±2	--	%
		12V/24V/36V/48V	--	±1	--	
Line Regulation	Rated load	5V	--	±0.5	--	
		12V/24V/36V/48V	--	±0.3	--	
Load Regulation	0% - 100% load	5V	--	±1	--	
		12V/24V/36V/48V	--	±0.5	--	
Ripple & Noise*	20MHz bandwidth (peak-to-peak value), 25℃	5V/12V	--	--	200	mV
		24V/36V/48V	--	--	240	
Minimum Load			--	0	--	%
Stand-by Power Consumption			--	--	--	W
Hold-up Time	Room temperature, full load, 115VAC/230VAC		--	12	--	ms
Short Circuit Protection			Hiccup, continuous, self-recovery			
Over-current Protection	Room temperature, high temperature		110% - 200% Io, delay protection, delay time 1s, self-recovery after the abnormality is removed			
	Low temperature		>110% Io, delay protection, delay time 1s, self-recovery after the abnormality is removed			
Over-voltage Protection	5V		≤6.5VDC (Output voltage hiccup)			
	12V		≤15.6VDC (Output voltage hiccup)			
	24V		≤31.6VDC (Output voltage hiccup)			
	36V		≤46.8VDC (Output voltage hiccup)			
	48V		≤62.4VDC (Output voltage hiccup)			
Over-temperature Protection			Output voltage turn off, self-recovery after the temperature drops			

Note: *The "Tip and barrel method" is used for ripple and noise test, output parallel 47uF electrolytic capacitor and 0.1uF ceramic capacitor, please refer to Enclosed Switching Power Supply Application Notes for specific information.

General Specifications

Item		Operating Conditions	Min.	Typ.	Max.	Unit
Isolation Test	Input - ⏚	Electric strength test for 1min., leakage current <5mA	2000	--	--	VAC
	Input - output		4000	--	--	
	Output - ⏚		1500	--	--	
Insulation Resistance	Input - ⏚	At 500VDC	50	--	--	MΩ
	Input - output		50	--	--	
	Output - ⏚		50	--	--	
Operating Temperature			-40	--	+85	℃
Storage Temperature			-40	--	+85	
Operating Humidity		Non-condensing	--	--	--	%RH
Storage Humidity			10	--	95	
Power Derating		Operating temperature derating; With aluminum plate*; +55℃ to +85℃	2.5	--	--	%/℃
		Without aluminum plate; 230VAC; Others; +55℃ to +70℃	3.33	--	--	
		Without aluminum plate; 230VAC; Others; +70℃ to +85℃	1.33	--	--	
		Without aluminum plate; 230VAC; 5V; +55℃ to +70℃	2	--	--	
		Without aluminum plate; 230VAC; 5V; +70℃ to +85℃	1.33	--	--	
		Without aluminum plate; 110VAC; +55℃ to +85℃	1.33	--	--	
		Input voltage derating; 80VAC - 100VAC	2	--	--	%/VAC

AC/DC 350W Enclosed Switching Power Supply

SLMF350-23BxxUH, SLMF350-23BxxUH-YW Series

Safety Standard		UL62368-1, GB4943.1 safety approved & EN62368-1, BS EN62368-1 (Report) Design refer to EN61558-1, EN60335-1
Safety Class		CLASS I
MTBF	MIL-HDBK-217F@25℃	⩾300,000 h

Note: *In order to optimize the heat dissipation performance, when the aluminum plate is used for auxiliary heat dissipation, please note: 1. The size of the aluminum plate is 450mm x 450mm x 3mm; 2. The surface of the aluminum plate mast be coated with thermal grease; 3. The product must be tightly attached to the aluminum plate.

Mechanical Specifications

Case Material	Metal (AL6063, SGCC)
Dimensions	220.00mm x 62.00mm x 31.00mm
Weight	680g (Typ.)
Cooling Method	Free air convection

Electromagnetic Compatibility (EMC)

Emissions	CE	CISPR32/EN55032 CLASS B	
	RE	CISPR32/EN55032 CLASS B	
	Harmonic current	IEC/EN61000-3-2 CLASS A	
	Voltage flicker	IEC/EN6100-3-3	
Immunity	ESD	IEC/EN 61000-4-2 Contact ±6KV/Air ±8KV	perf. Criteria A
	RS	IEC/EN 61000-4-3 10V/m	perf. Criteria A
	EFT	IEC/EN 61000-4-4 ±2KV	perf. Criteria A
	Surge	IEC/EN 61000-4-5 line to line ±2KV/line to ground ± 4KV	perf. Criteria A
	CS	IEC/EN61000-4-6 10 Vr.m.s	perf. Criteria A
	Voltage dips, short interruptions and voltage variations immunity	IEC/EN61000-4-11 0%, 70%	perf. Criteria B
	Intercom interference test	MS-SOP-DQC-007	perf. Criteria B

Product Characteristic Curve

With aluminum plate

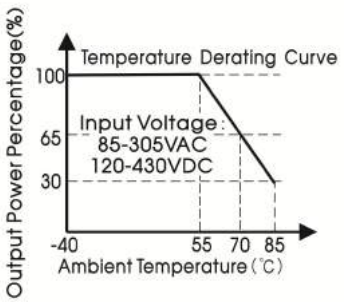

Without aluminum plate

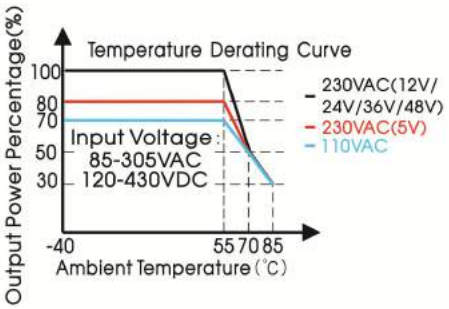

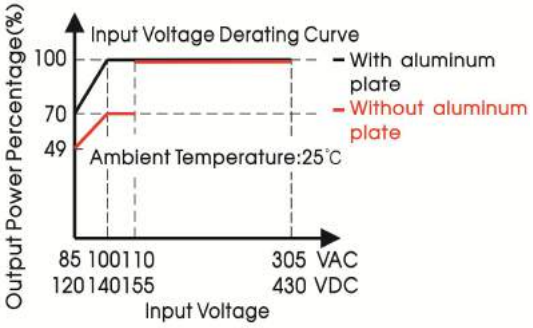

Note: 1. With an AC input voltage between 85-100VAC and a DC input between 120-140VDC the output power must be derated as per the temperature derating curves;

2. This product is suitable for applications using natural air cooling; for applications in closed environment please consult SCHMID-M FAE.

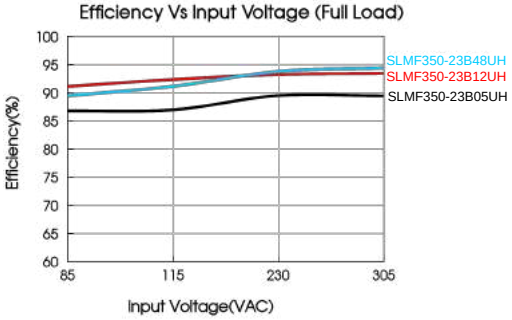

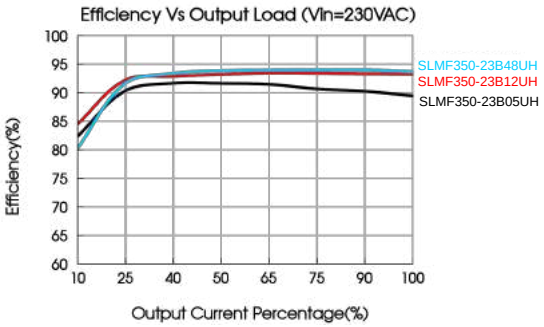

AC/DC 350W Enclosed Switching Power Supply

SLMF350-23BxxUH, SLMF350-23BxxUH-YW Series

Dimensions and Recommended Layout

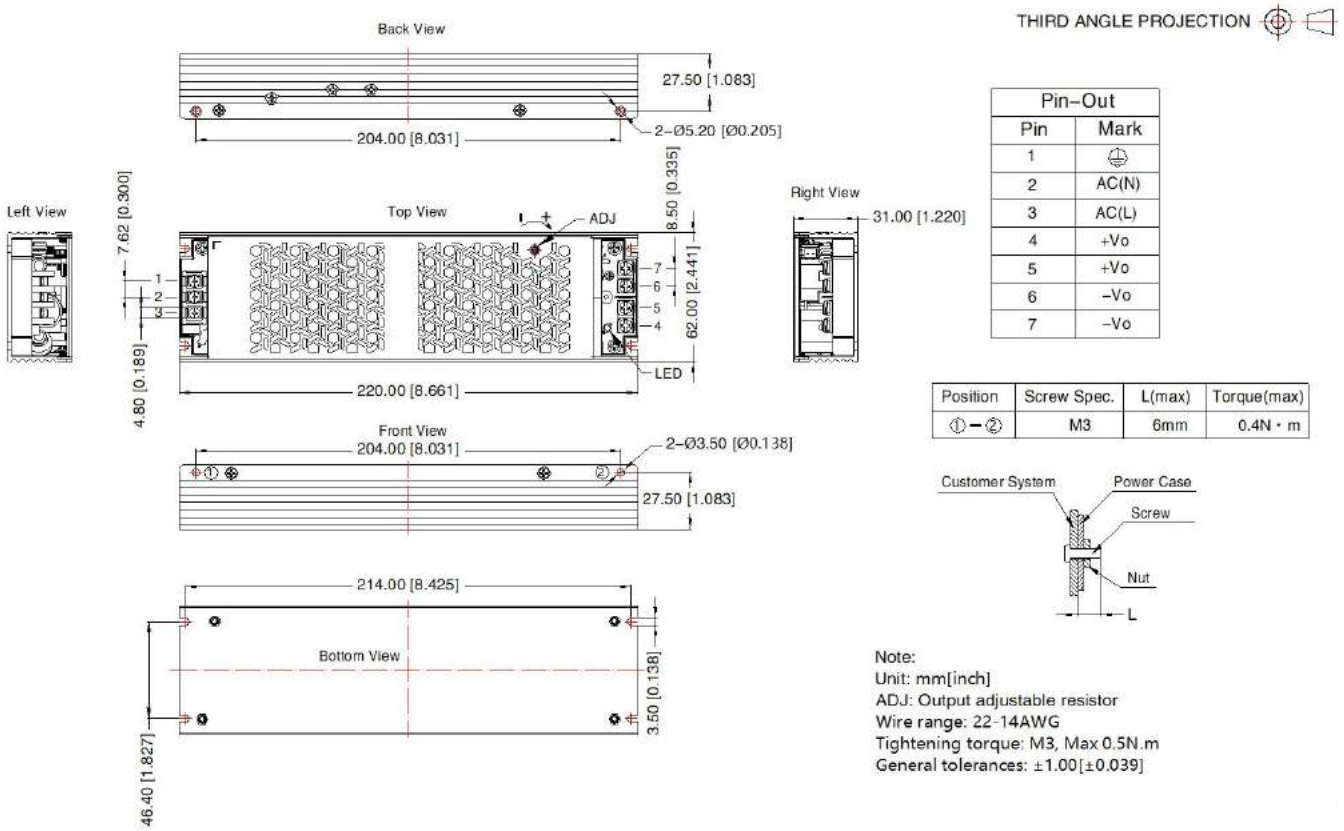

Pin-Out	
Pin	Mark
1	⏚
2	AC(N)
3	AC(L)
4	+Vo
5	+Vo
6	-Vo
7	-Vo

Position	Screw Spec.	L(max)	Torque(max)
① – ②	M3	6mm	0.4N · m

Installation Diagram

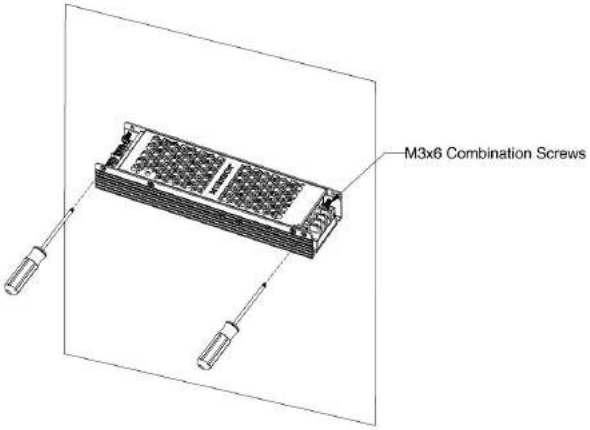

Figure 1

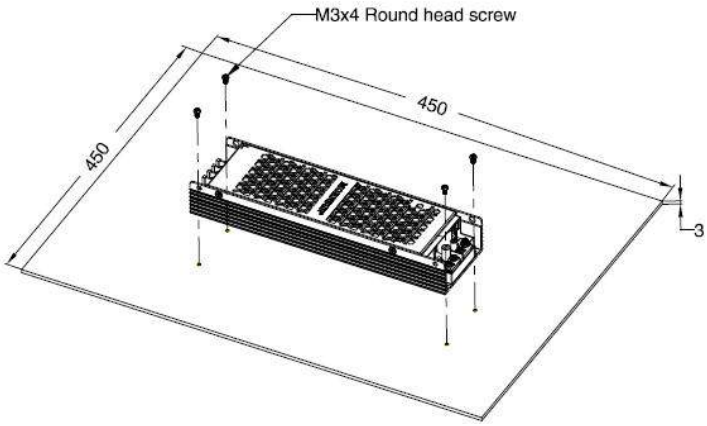

Figure 2

Note: 1. Figure 1 is a schematic diagram of side installation, install with M3 x 6 combination screws, derating refer to without aluminum plate curve;
2. Figure 2 is the schematic diagram of the bottom installation, install with M3 x 4 round head screws, it is necessary to apply thermal grease on the bottom of the product, derating refer to with aluminum plate curve.

Note:

1. Unless otherwise specified, parameters in this datasheet were measured under the conditions of Ta=25℃, humidity <75% RH with nominal input voltage and rated output load;
2. The room temperature derating of 5℃/1000m is needed for operating altitude greater than 2000m;
3. All index testing methods in this datasheet are based on our company corporate standards;
4. In order to improve the efficiency at high input voltage, there will be audible noise generated, but it does not affect product performance and reliability;
5. We can provide product customization service, please contact our technicians directly for specific information;
6. Products are related to laws and regulations: see "Features" and "EMC";
7. The out case needs to be connected to PE (⏚) of system when the terminal equipment in operating;
8. The output voltage can be adjusted by the ADJ, clockwise to decrease;
9. Our products shall be classified according to ISO14001 and related environmental laws and regulations, and shall be handled by qualified units;
10. The power supply is considered a component which will be installed into a terminal equipment. All EMC tests should be confirmed with the final equipment. Please consult our FAE for EMC test operation instructions.